FACADE CLADDING

Façade cladding

Topic	Referential	Performance
Mechanical span	EN 1993-1-3:2006 EAD 090062-00-0404	2m
Diaphragm 3m x3m	-	Not relevant depend of wall
Seismic	-	-
Thermal (Up)	EN ISO 6946:2017	>0.25 W/m^2.K with wall
Themal choc	-	Not relevant
Reaction to fire	EN 13823 EN 14782 EN 13501-1	Not tested
Resistance to fire	EN 1364-1 EN 1363-1 EN 13501-2	Not tested depend on wall
Facade test propagation	ISO 13785-1	Not pass Necessity to have mineral wool strip to the x meters
External fire roof performance	EN 13501-5 CEN/TS 1187	Not relevant
Smouldering		Yes
Water permeability	EN 12865:2002	Mounted in double skin configuration : Class A 1200 Pa
Air permeability	EN 12114:2000	Mounted in double skin configuration: Pressure: n=0.6 and c=1.0 Suction: n=0.7 and c=0.6
Acoustic	ISO 10140	>30 db (effect of wall)
Fungi test		Sensible
Durability	-	Not relevant Pass demonstrator 2 years
Core environmental impact indicator - Climate change - total (module D included)	EN 15804+A2	36,3 kg CO2 equiv/UF (mounted in façade cladding configuration)
Wood fiber sourcing	PEFC	Yes

Cladding foot

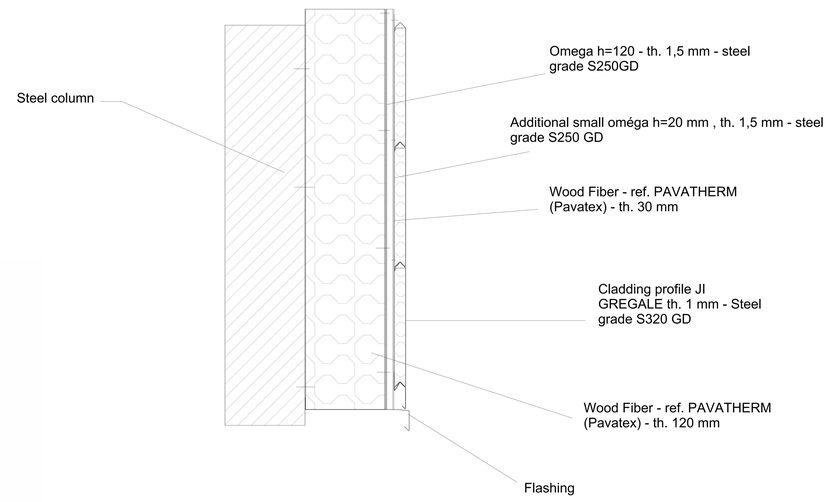

fasteners and stitching of façade cladding metallic components are represented by short axis lines

Current zone

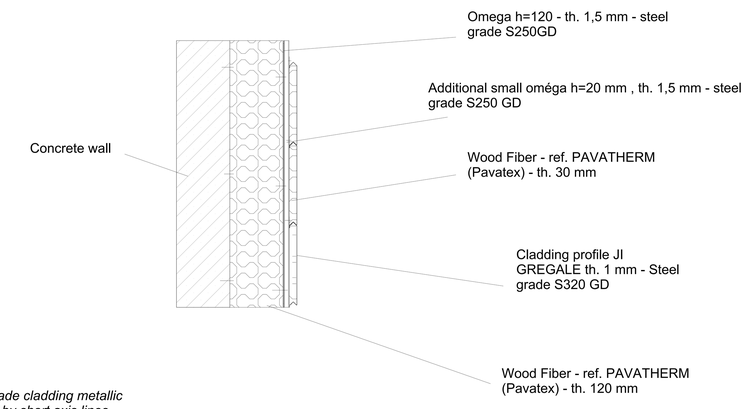

fasteners and stitching of façade cladding metallic components are represented by short axis lines

Angles

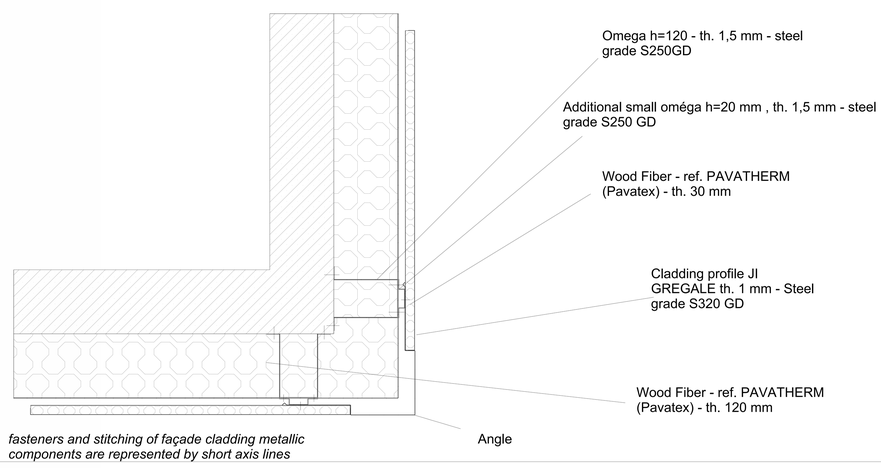

fasteners and stitching of façade cladding metallic components are represented by short axis lines

Parapet

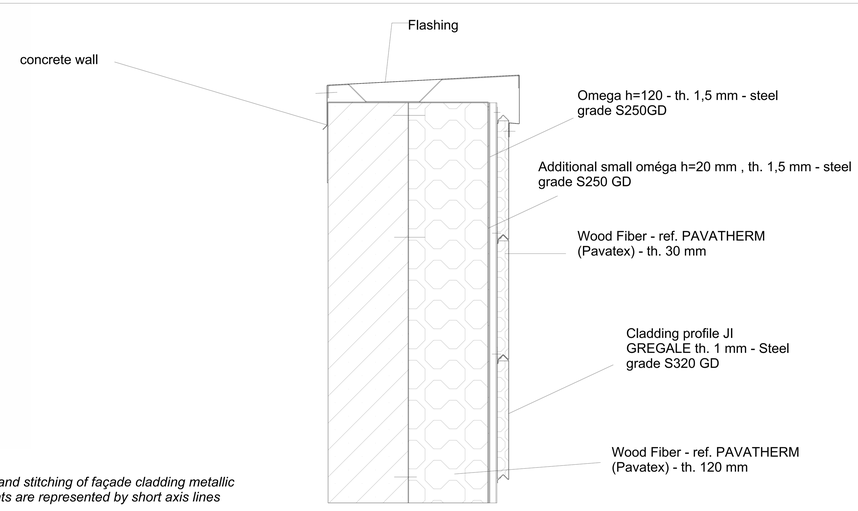

fasteners and stitching of façade cladding metallic components are represented by short axis lines