Incseb
LOW CARBON STEEL ENVELOPE SYSTEMS

DOUBLE SKIN CLADDING

Double skin cladding

Topic	Referential	Performance
Mechanical span	EN 1993-1-3:2006	6m
Diaphragm 3m x3m	ECCS CIB 379 CSTB book Nb 3725 French technical guidances « Recommandations RAGE»	29.8 kN / 150mm
Seismic	AAMA 501.4-09 AAMA 501.6-09	Performance of the system not achieved : greater than capacity of the test rig
Thermal (Up)	EN ISO 6946:2017	0.24 W/m^2.K with profile 0.30 W/m^2.K with cassettes
Thermal choc	-	Not relevant
Reaction to fire	EN 13823 EN 14782 EN 13501-1	Bs2d0
Resistance to fire	EN 1364-1 EN 1363-1 EN 13501-2	External wall: E90 EI30 (i→o) Partition: E90 EI45
Façade test propagation	ISO 13785-1	Not pass Necessity to have mineral wool strip to the x meters
External fire roof performance	EN 13501-5 CEN/TS 1187	Not relevant
Smouldering		Yes
Water permeability	EN 12865:2002	Class A 1200 Pa
Air permeability	EN 12114:2000	Pressure and suction: n=0,8 and c=1,3
Acoustic	ISO 10140	$R_{w(C,Ctr)}$ 49 (-2 ;-9) dB
Fungi test		sensible
Durability	-	Not relevant Pass demonstrator 2 years
Core environmental impact indicator - Climate change - total (module D included)	EN 15804+A2	36,3 kg CO2 equiv/UF (complete double skin cladding system)
Wood fiber sourcing	PEFC	Yes

Cladding foot

fasteners and stitching of double skin cladding metallic components are represented by short axis lines

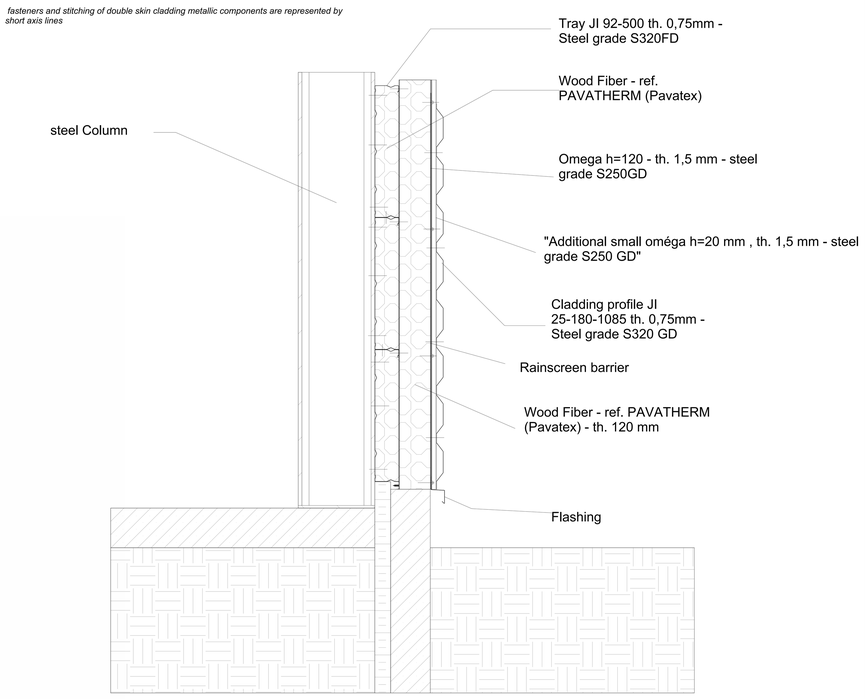

Current zone

fasteners and stitching of double skin cladding metallic components are represented by short axis lines

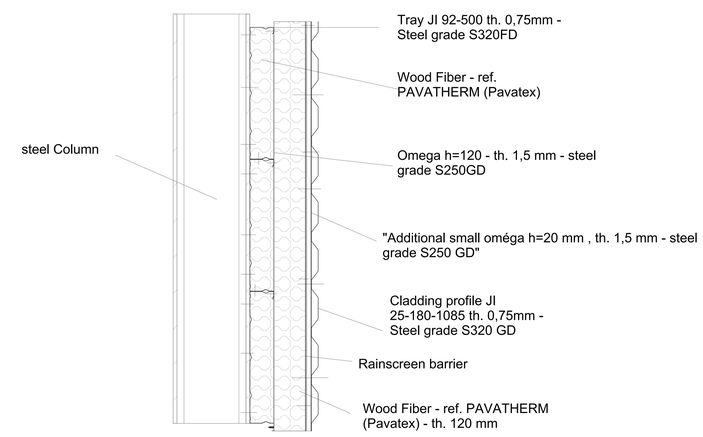

Angles

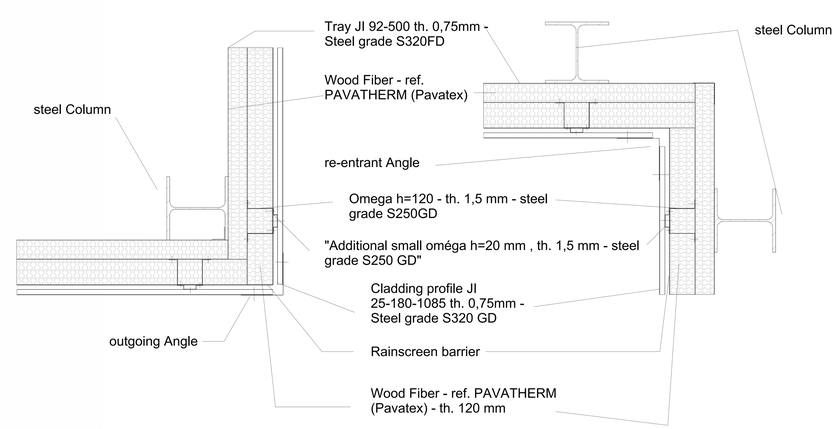

fasteners and stitching of double skin cladding metallic components are represented by short axis lines

Parapet

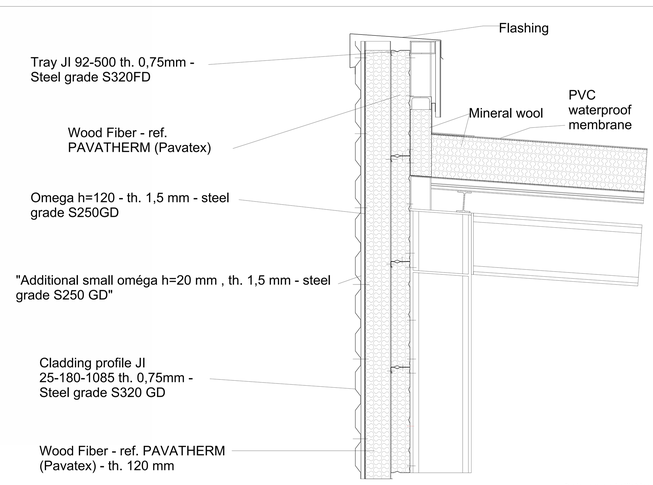

fasteners and stitching of double skin cladding metallic components are represented by short axis lines